VIT UNIVERSITY
(Estd. u/s 3 of UGC Act 1956)
www.vit.ac.in
Vellore ▪ Chennai
CHENNAI CAMPUS
Vandalur - Kelambakkam Road, Chennai - 600127

PLC based man less railway gate crossing

Course Code: BMHA302P
Course Name: Industrial Automation
Slot: L19+L20

Done by:
23BMH1080 – Rakesh S D
23BMH1128 – Rittu Ronald R M
23BMH1103 – Nishanth K
23BMH1129 – Josika P

Objective

- To design and implement an automated Railway Level Crossing Control System using PLC ladder logic programming.
- To automatically close and open the crossing gate based on train detection sensors ensuring safety of road users at all times.
- To provide real time visual indication through Stop and Go signal lights, sensor indicators and alarm LEDs to alert people at the crossing zone.
- To validate the system reliability through structured test cases covering normal operation, emergency stop, gate control and stress testing scenarios.

Setup Schematic

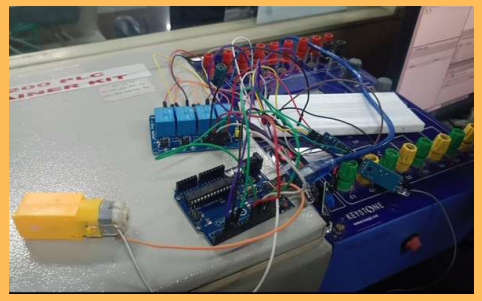

Sample output

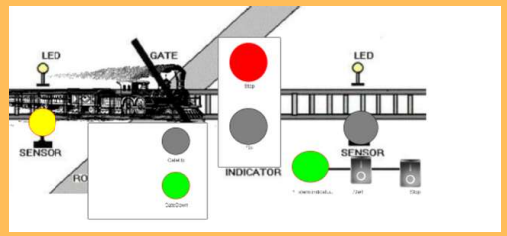

PLC Diagram

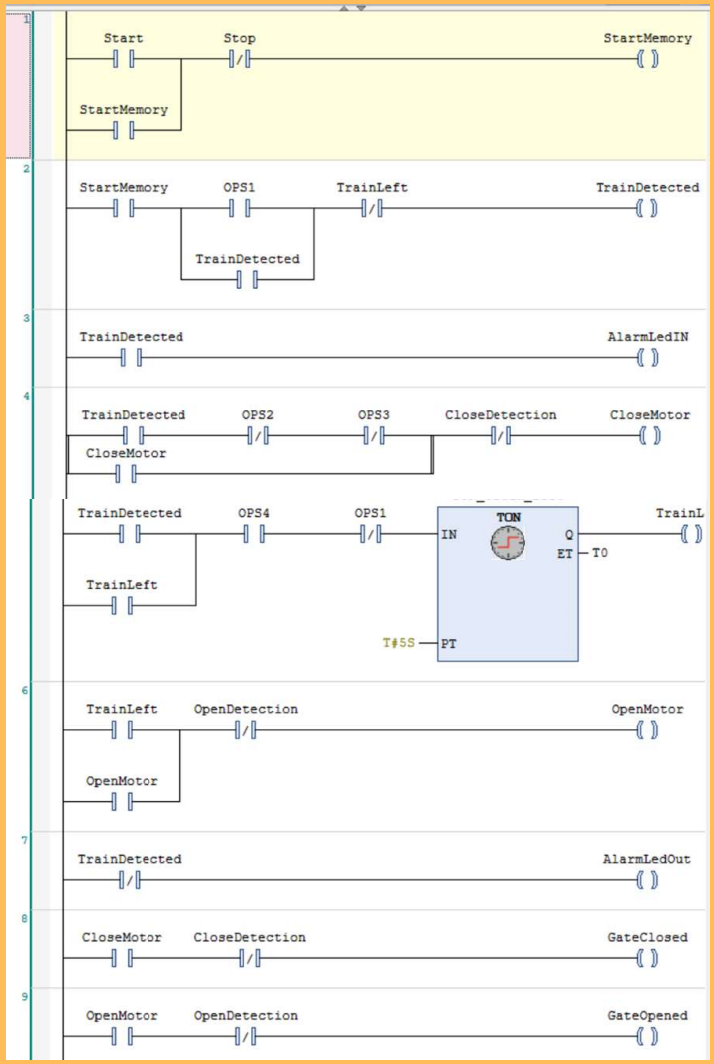

Methodology

- PLC ladder logic was designed and programmed in CODESYS to control the railway level crossing system including gate motor control, train detection, alarm LEDs, timer functions and emergency stop operations.
- A real time HMI visualization was developed in CODESYS and 9 structured test cases were conducted to validate the system covering normal operation, gate control, emergency stop and stress testing.
- IR sensors connected to an Arduino Uno detect the train and convert analog signals to digital using threshold detection, which is then sent to the PLC via a relay module that steps up the voltage from 5V to 12V.
- The PLC processes the input signals and drives a 12V DC motor to physically operate the crossing gate, while the HMI displays the real time status of the entire system.

Communication hardware

- Arduino Uno is used to read analog data from the IR sensors placed at the railway crossing and converts it into a digital signal using a threshold based detection method to identify the presence of a train.
- The digital signal from the Arduino is fed into a relay module which converts the 5V digital output to a 12V signal compatible with the PLC input terminals.
- The PLC processes the input signals using ladder logic and sends output signals to control a 12V DC motor which physically operates the railway crossing gate.
- An HMI (Human Machine Interface) is connected to the PLC in Codesys to display the real time status of the railway crossing including gate position, sensor activity and signal indicators.

Practical Applications

- Unmanned Railway Level Crossings
- Industrial Conveyor Interlocking
- Automated Boom Barriers that are used in parking lots, toll plazas, and restricted access zones.
- Hazardous Zone Protection that are employed in chemical plants and mining operations to automatically close safety barriers.